Model 120334

Description

- PVD Brushed Nickel
- Ceramic Cartridge
- Single Handle Kitchen Faucet
- Metal Lever Handle
- Commercial-Style for Residential Kitchen
- Matching Finish Pull-Down Sprayer

Compliance

- Designed to comply with requirements of ASME A112.18.1
- Meets low lead requirements of NSF Standard-61, Section-9
- Complies with the requirements of the UPC (Uniform Plumbing Code)
- Complies with ADA (Americans with Disabilities Act)
- Meets or exceeds CSA B125

Listings

- IAPMO (International Association of Plumbing & Mechanical Officials)
- cUPC (Uniform Plumbing Code & Canadian Uniform Plumbing Code)

Warranty

- Limited Lifetime Warranty
  Refer to Premier Faucet warranty program for further details and restrictions.

Essen™

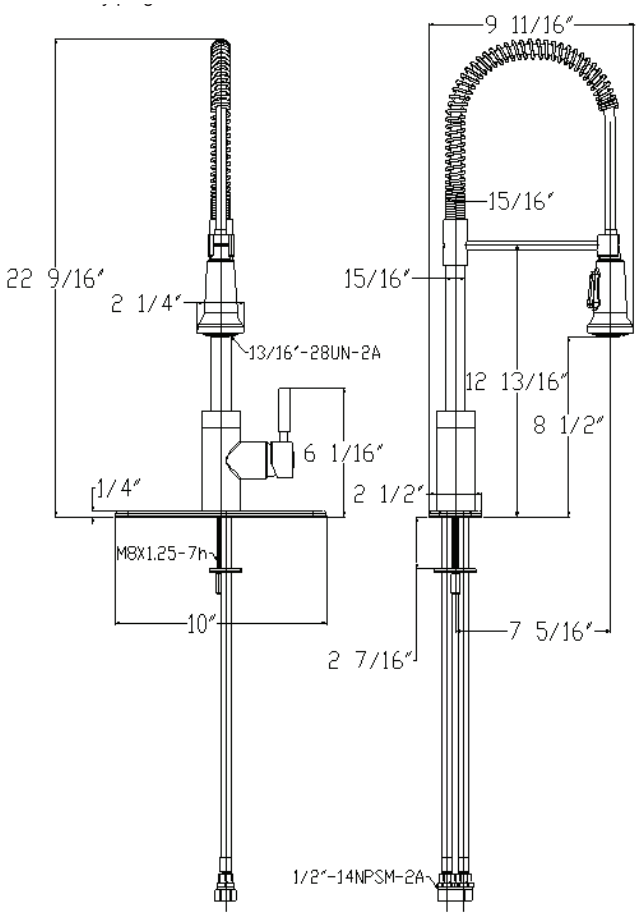

UPC

CSA US

Model 120334

Commercial-Style,
Pull-Down Kitchen Faucet

PVD Brushed Nickel

Ceramic Cartridge

For additional information contact Premier Faucet at 866-745-4010 or visit our website at www.premierfaucet.com

© Premier Faucet 2009